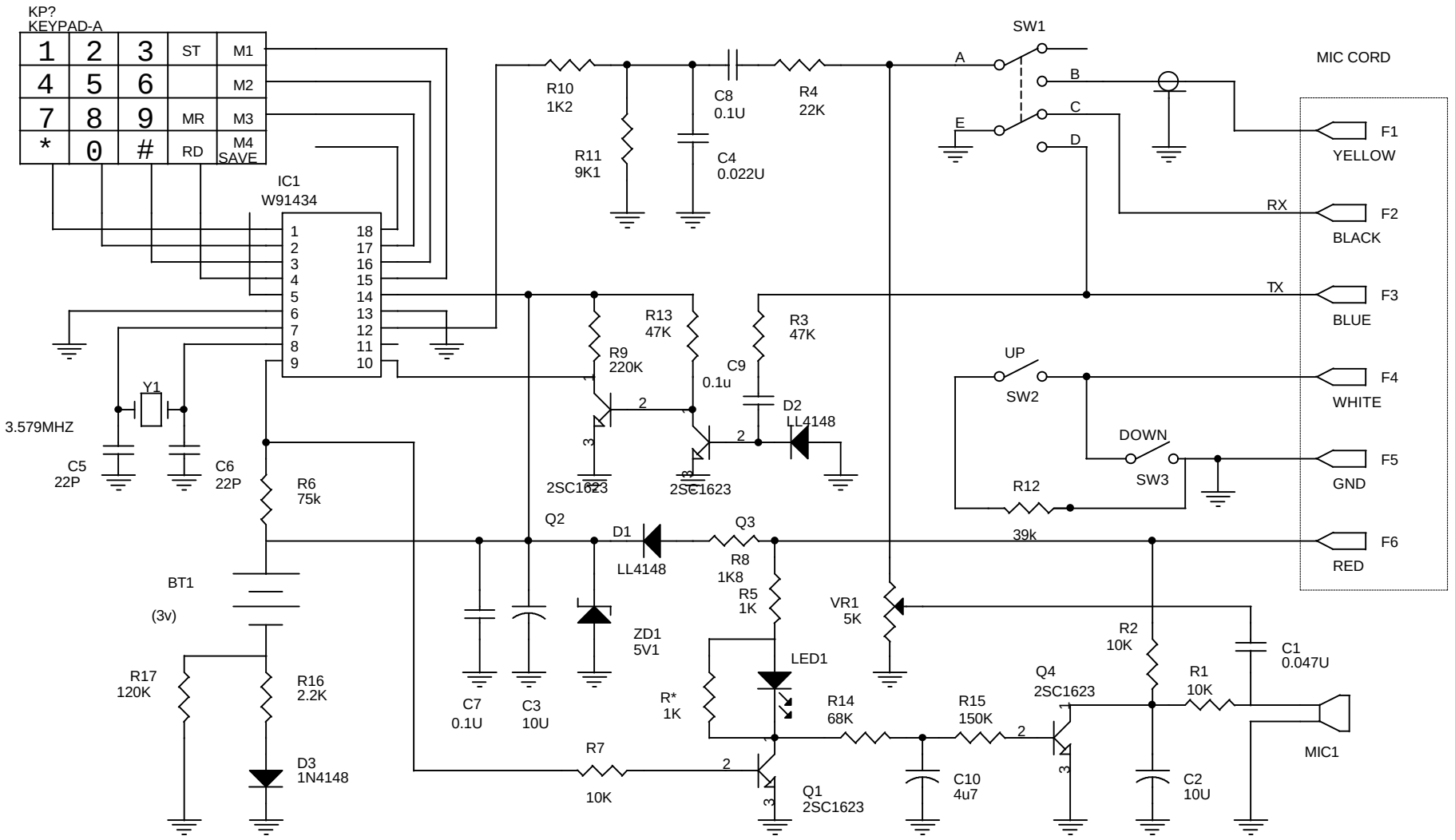
KP?
KEYPAD-A
1 2 3 ST M1
4 5 6 M2
7 8 9 MR M3
* 0 # RD M4
SAVE
IC1
W91434
1 2 3 4 5 6 7 8 9
18 17 16 15 14 13 12 11 10
Y1
3.579MHZ
C5
22P
C6
22P
R6
75k
BT1
(3v)
R17
120K
R16
2.2K
D3
1N4148
R10
1K2
R11
9K1
C8
0.1U
C4
0.022U
R4
22K
SW1
A
B
C
D
E
MIC CORD
F1
YELLOW
RX
F2
BLACK
TX
F3
BLUE
UP
SW2
F4
WHITE
DOWN
SW3
F5
GND
R12
39k
F6
RED
R13
47K
R9
220K
C9
0.1u
R3
47K
D2
LL4148
2SC1623
2SC1623
Q2
D1
LL4148
Q3
R8
1K8
R5
1K
VR1
5K
ZD1
5V1
LED1
R*
1K
C7
0.1U
C3
10U
R7
10K
R14
68K
R15
150K
Q1
2SC1623
Q4
2SC1623
R2
10K
R1
10K
C1
0.047U
MIC1
C10
4u7
C2
10U
TELINSTRUMENT CO,LTD.
Title
EM200SP DTMF MICROPHONE AE6080
Size
A
Document Number
EM200SP.SCH
Rev
Date: Wednesday, January 14, 1998
Sheet 0 of 0